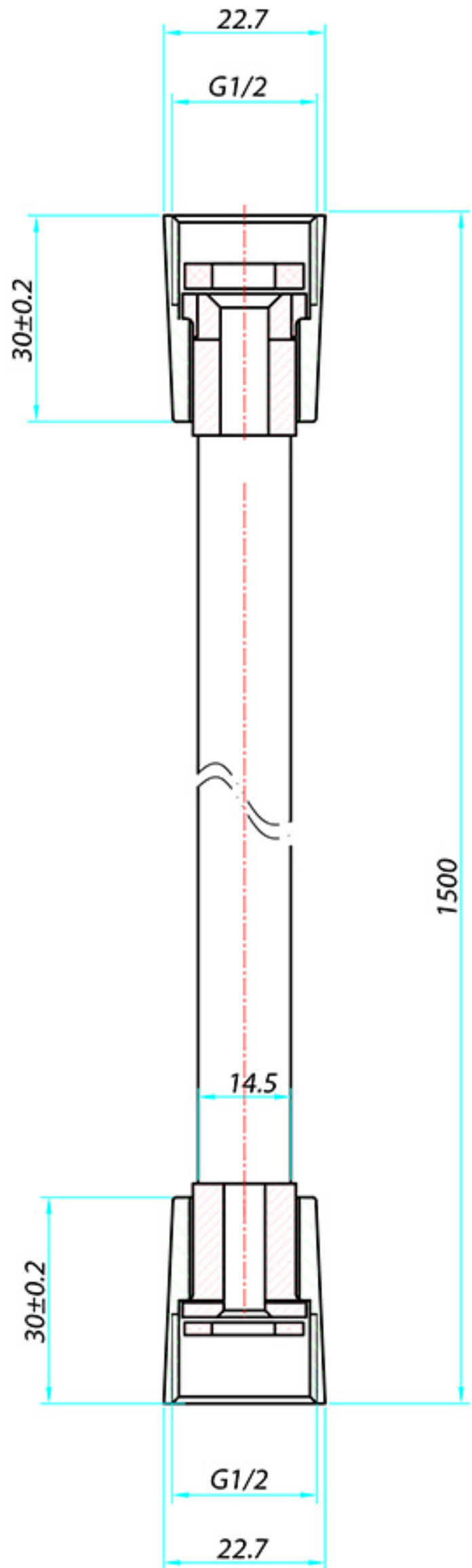
22.7
G1/2
30±0.2
1500
14.5
30±0.2
G1/2
22.7

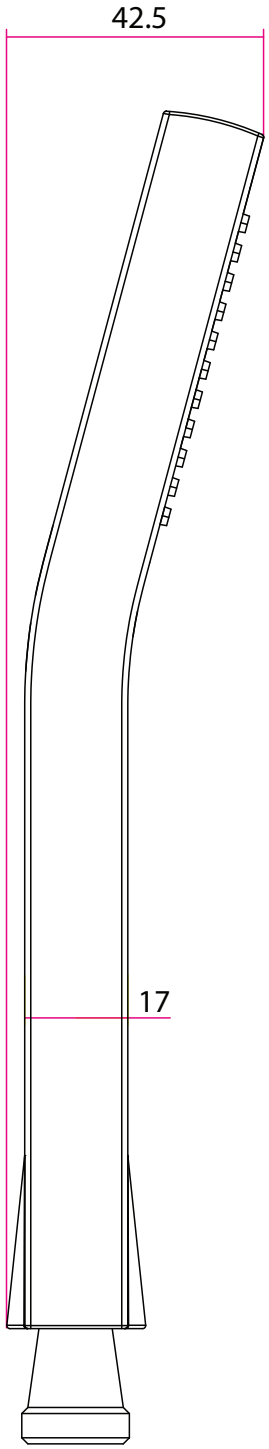
42.5
17

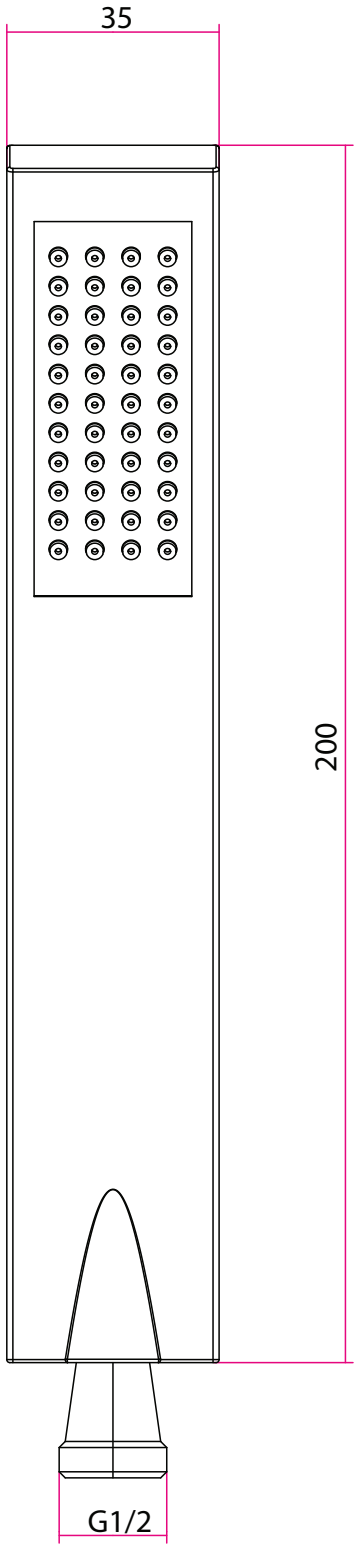
35
200
G1/2

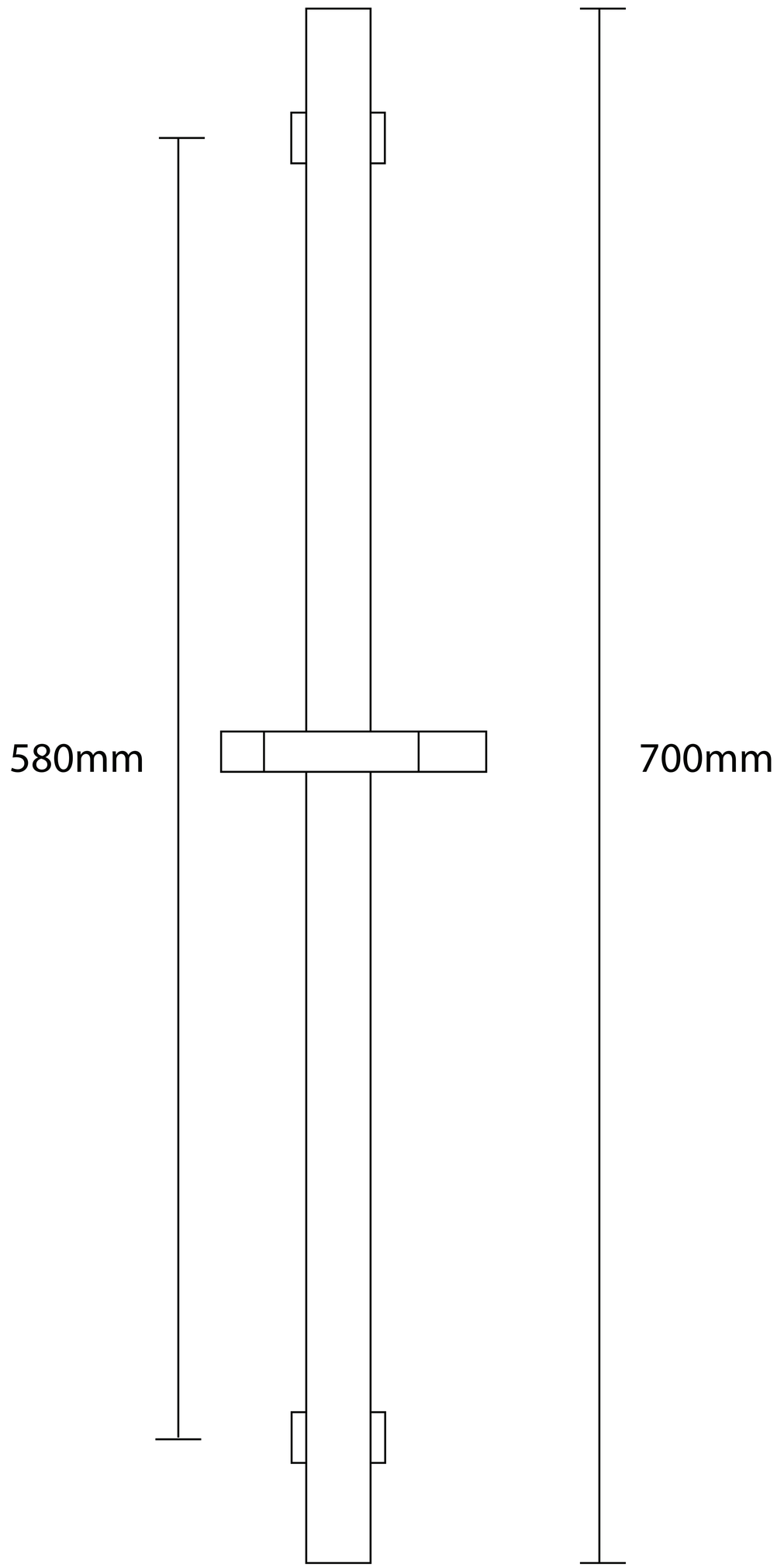
580mm
700mm