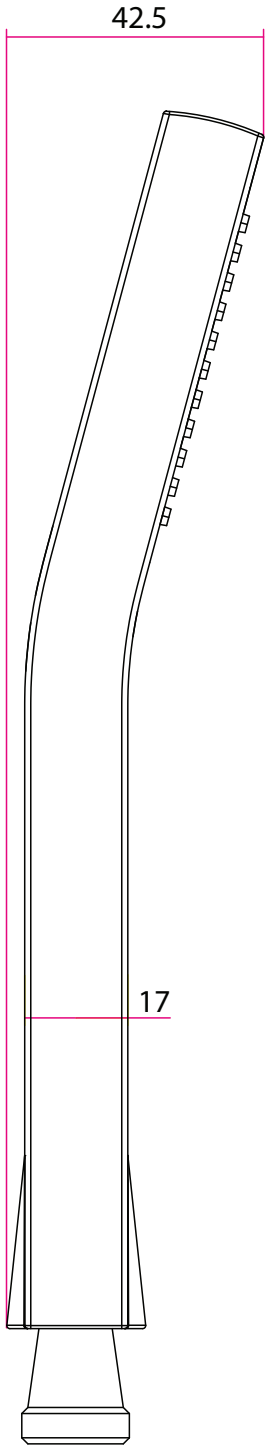
42.5
17

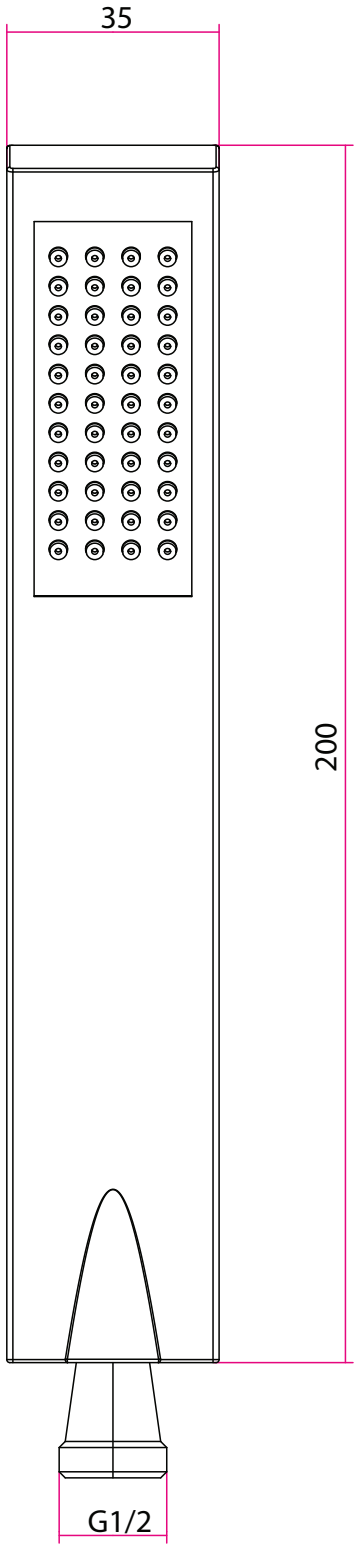
35
200
G1/2

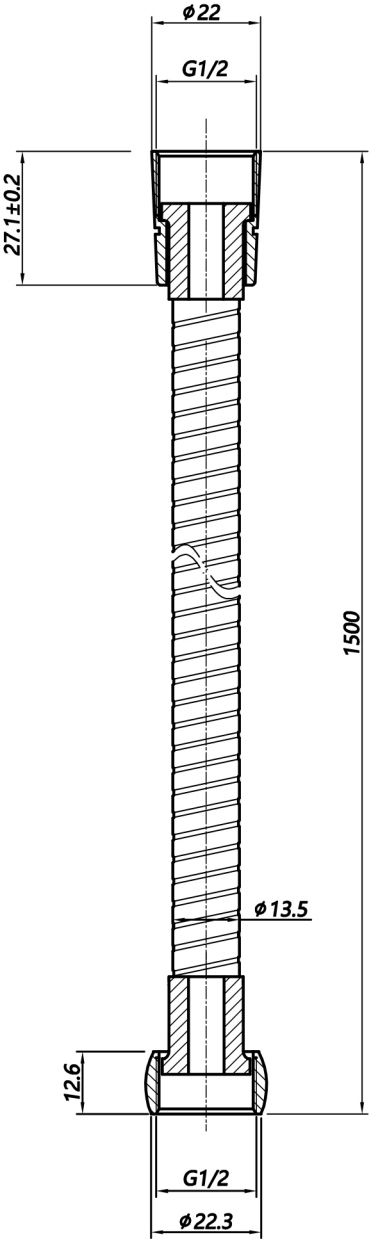
ϕ22
G1/2
27.1±0.2
1500
ϕ13.5
12.6
G1/2
ϕ22.3

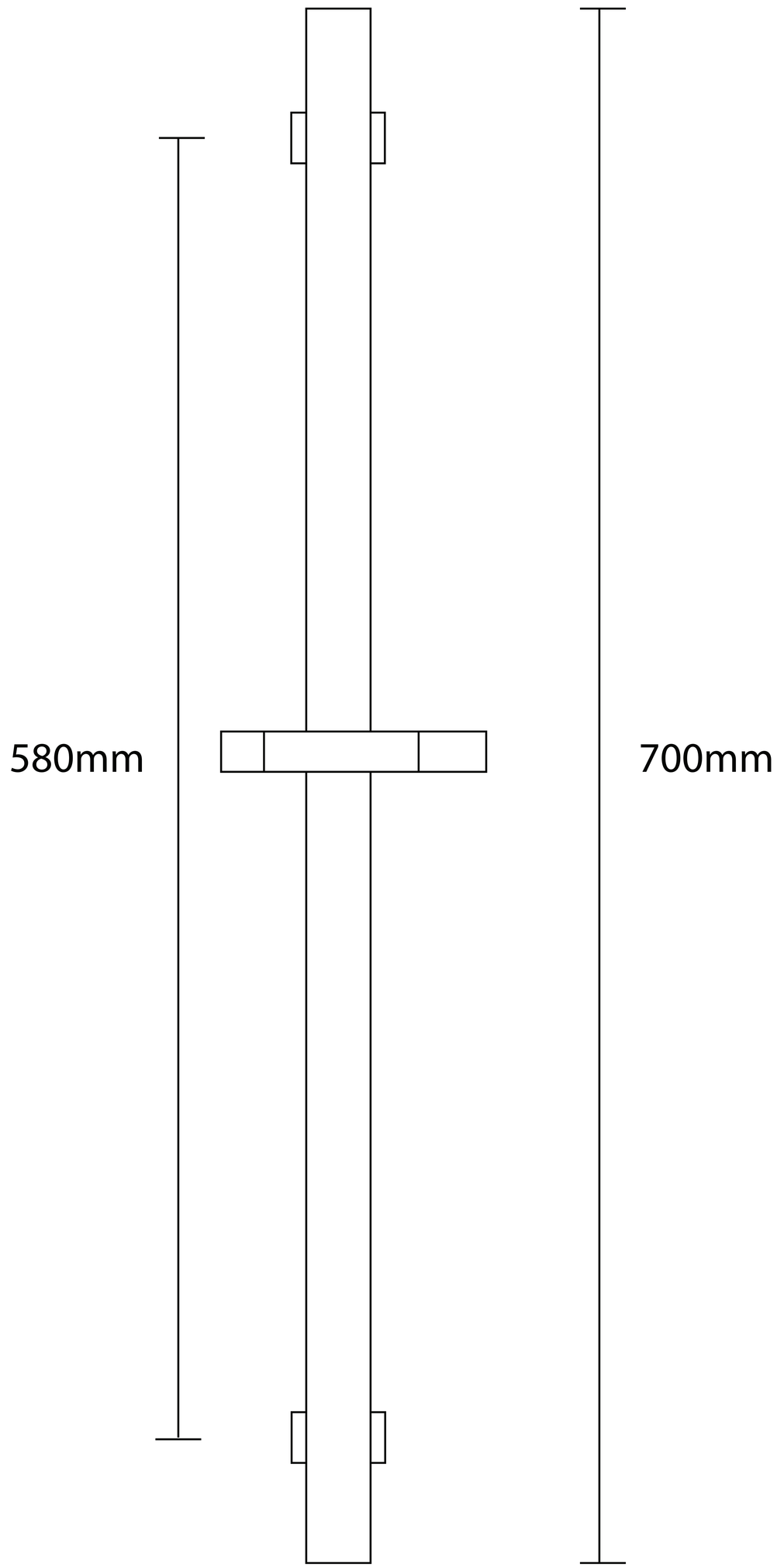
580mm
700mm