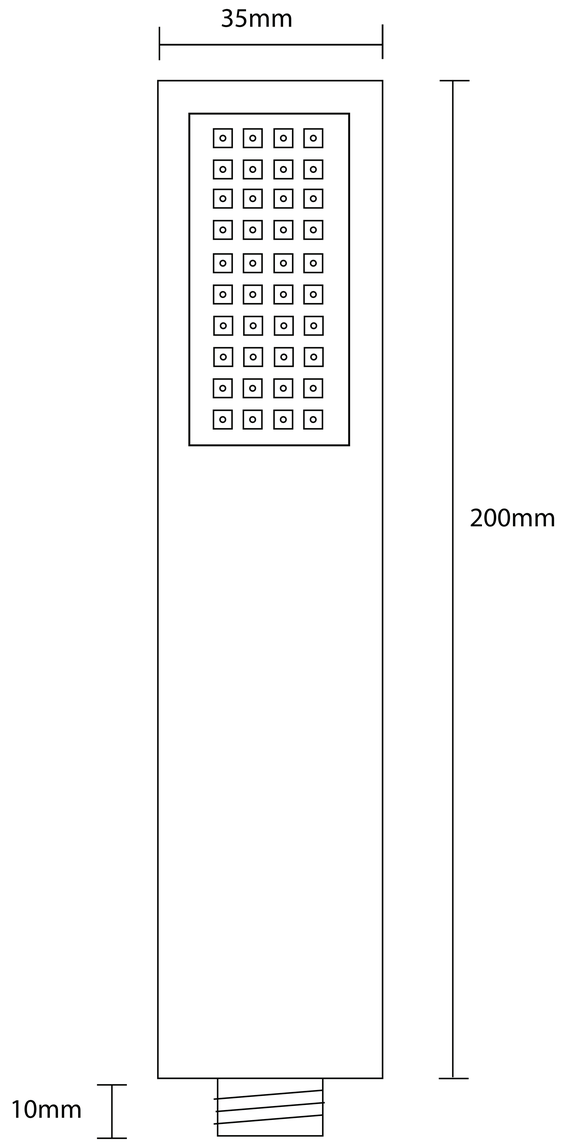
35mm
200mm
10mm

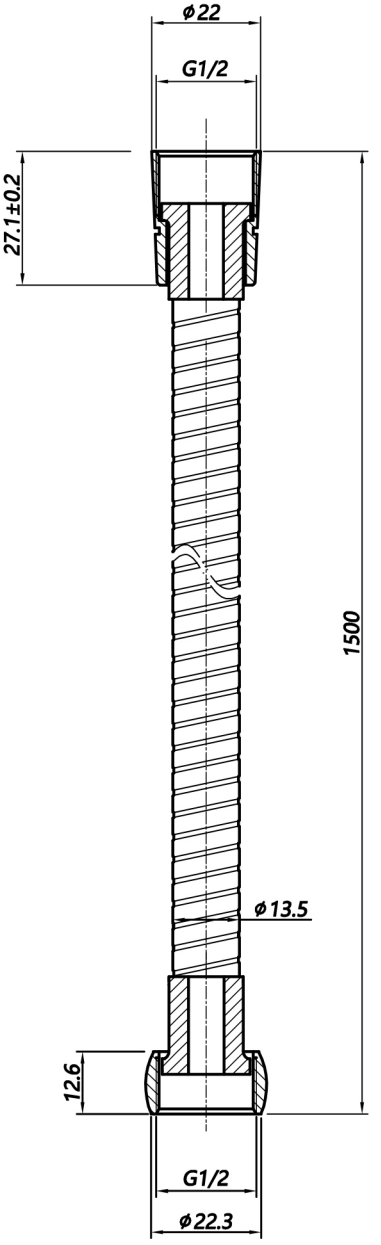
ϕ22
G1/2
27.1±0.2
1500
ϕ13.5
12.6
G1/2
ϕ22.3

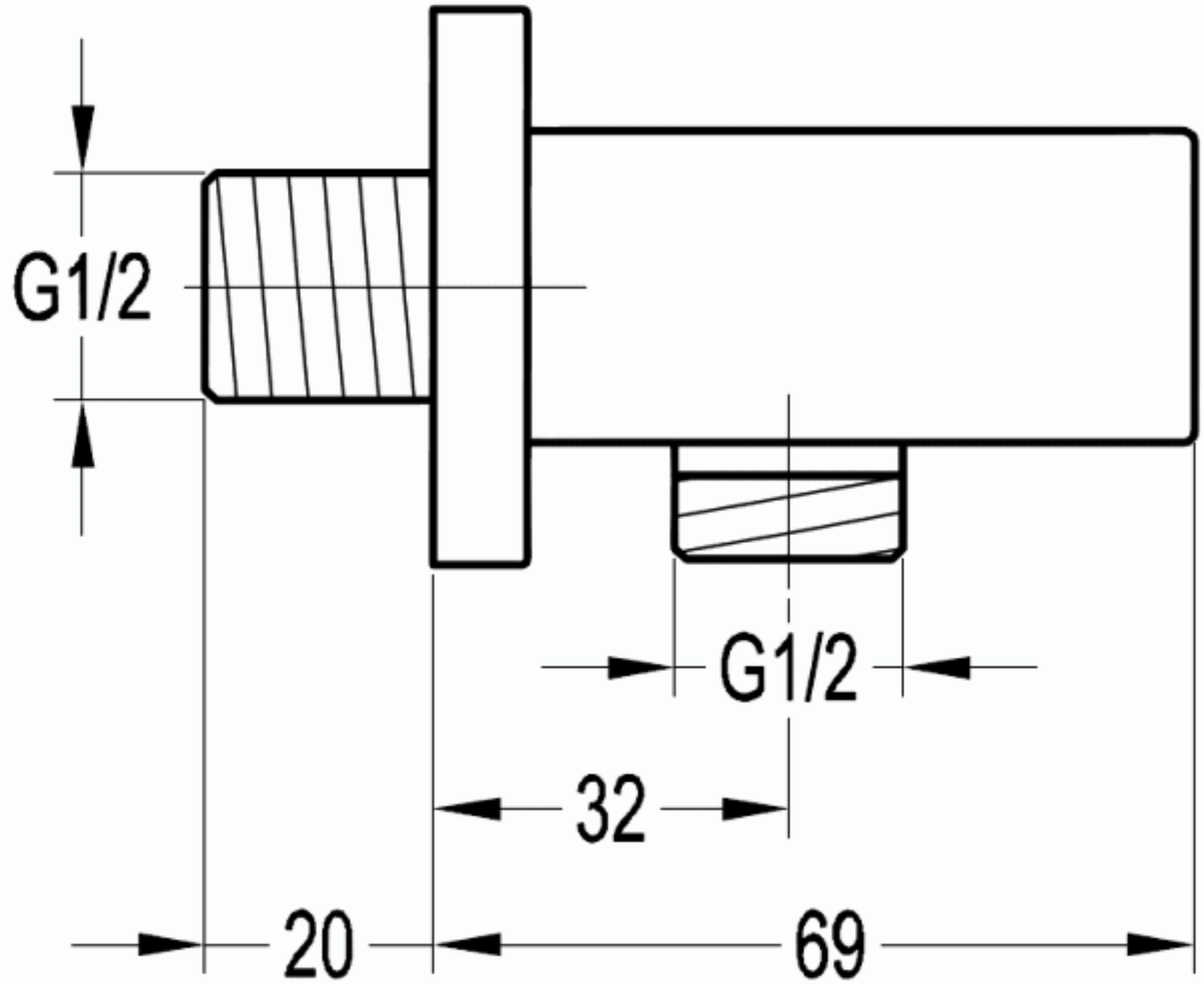
G1/2
G1/2
32
20
69

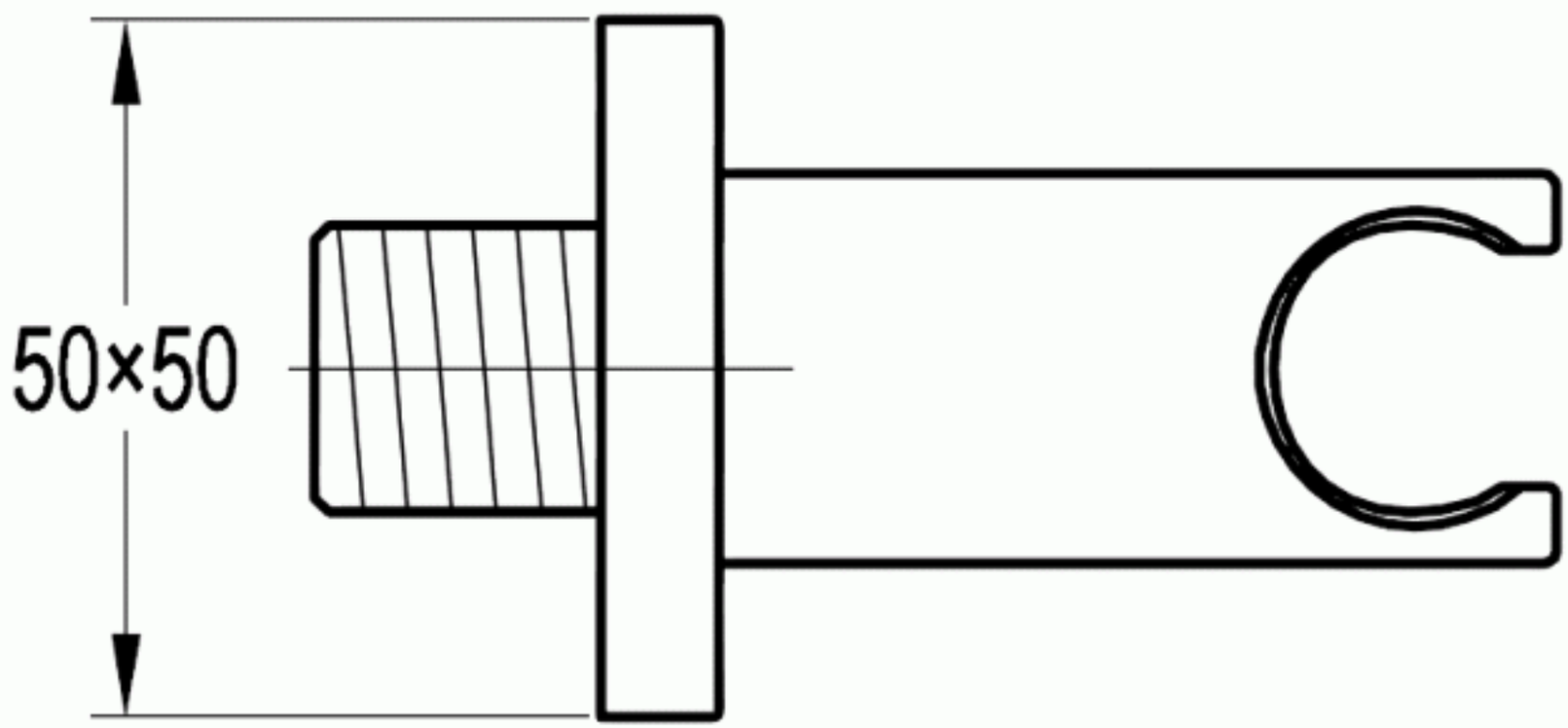
50×50