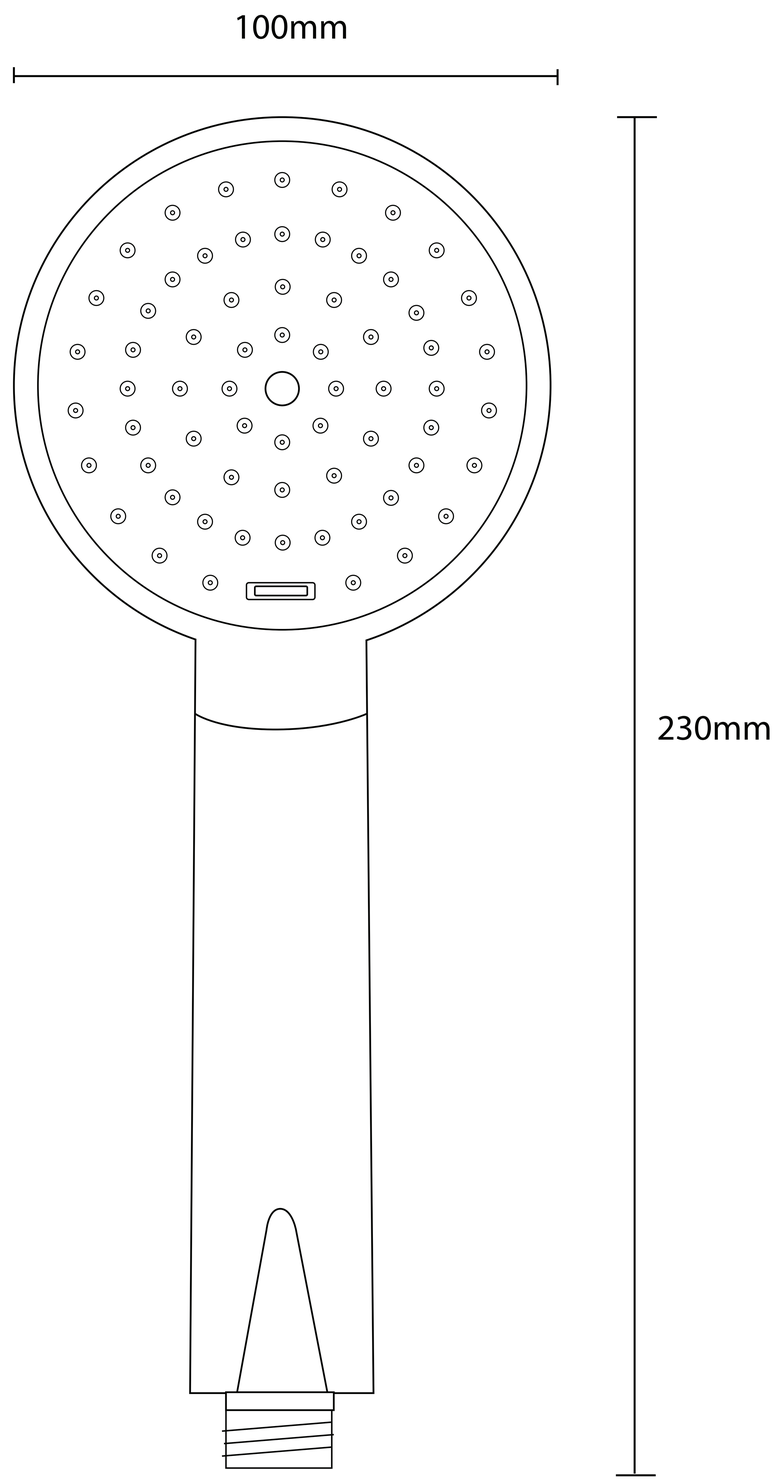
100mm
230mm

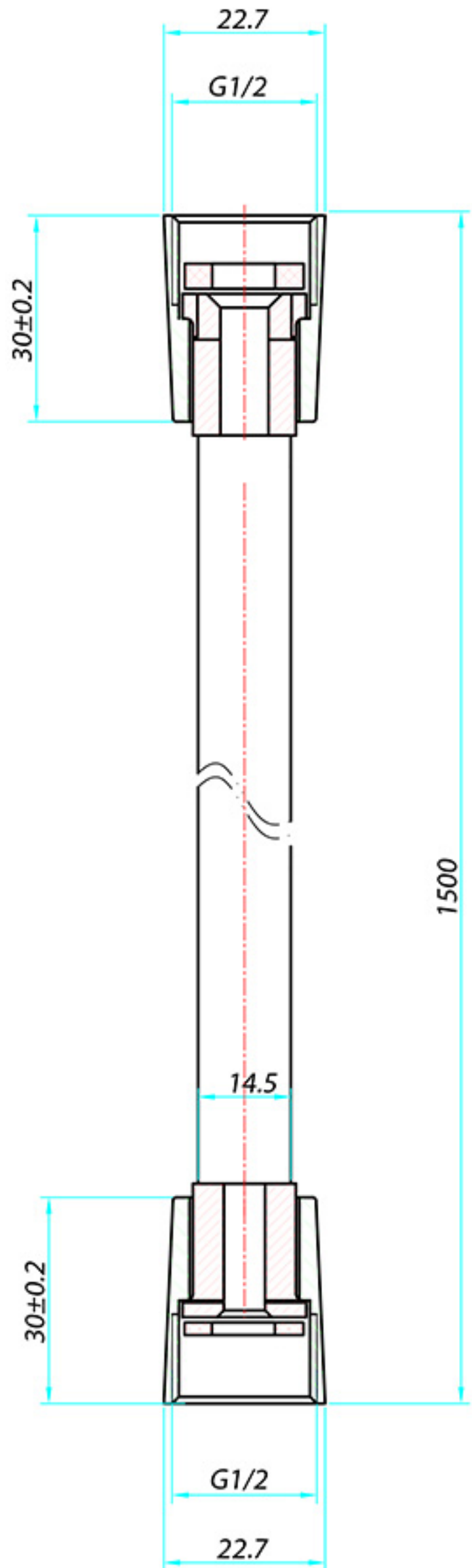
22.7
G1/2
30±0.2
1500
14.5
30±0.2
G1/2
22.7

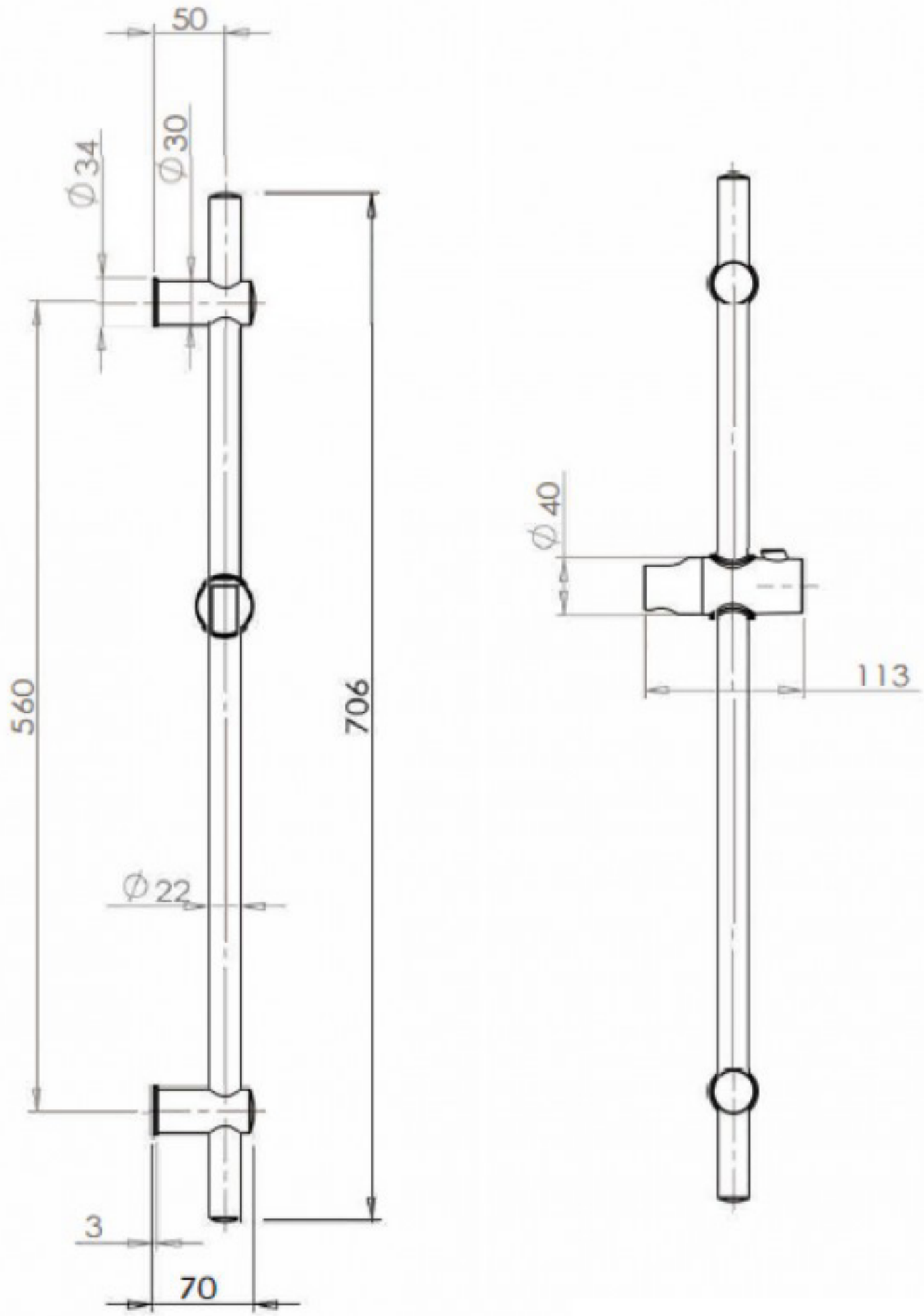
50
Ø34
Ø30
560
706
Ø22
3
70
Ø40
113