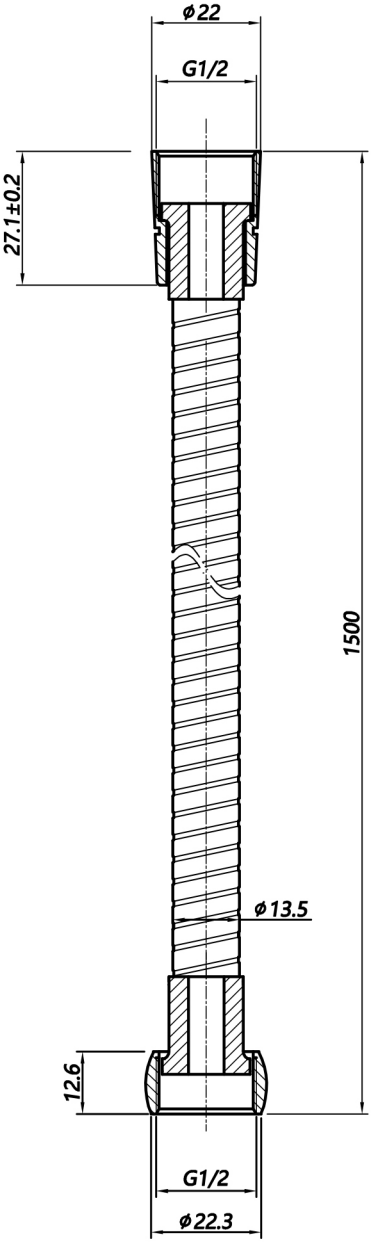
ϕ22
G1/2
27.1±0.2
1500
ϕ13.5
12.6
G1/2
ϕ22.3

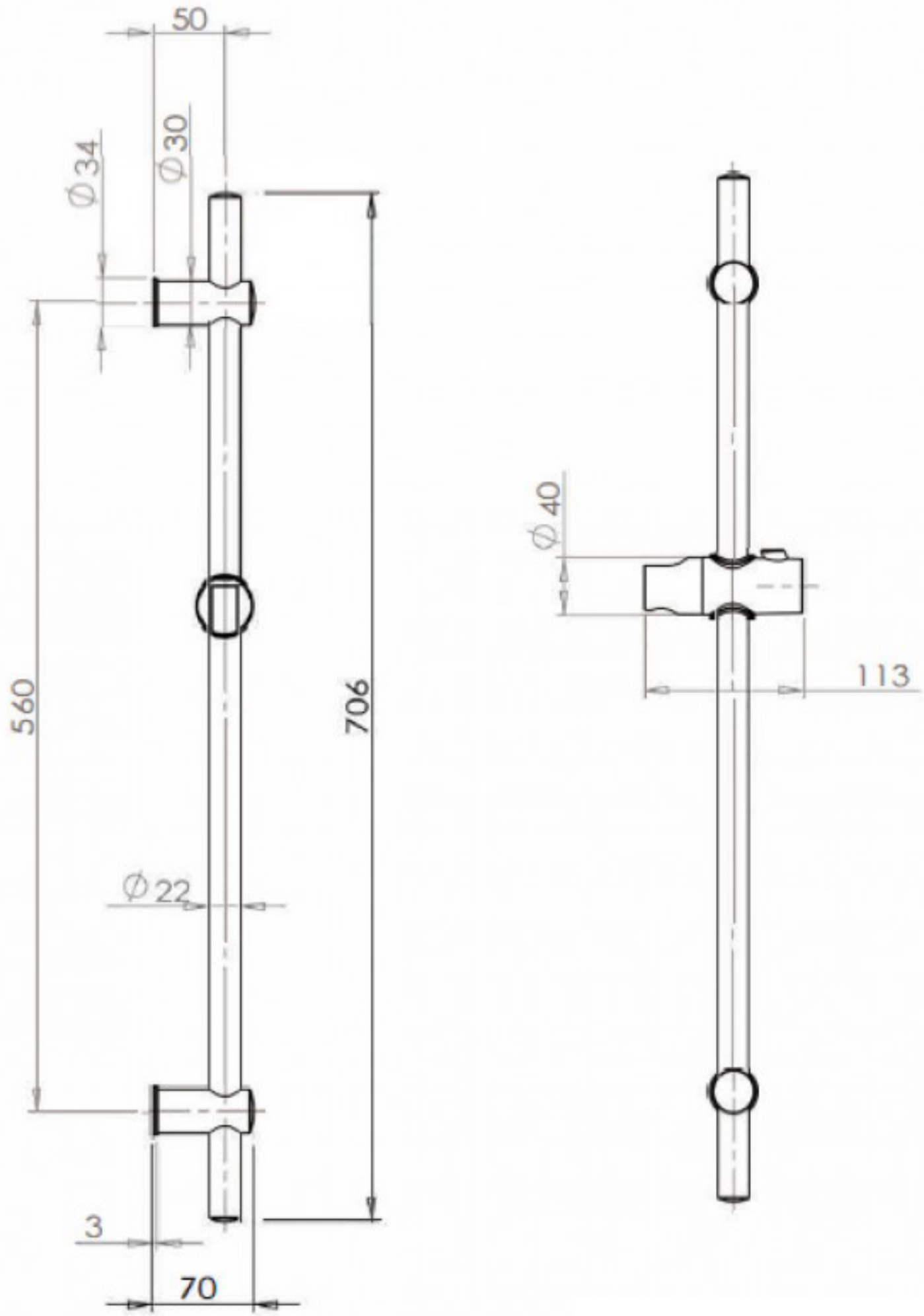
50
Ø34
Ø30
560
706
Ø22
3
70
Ø40
113

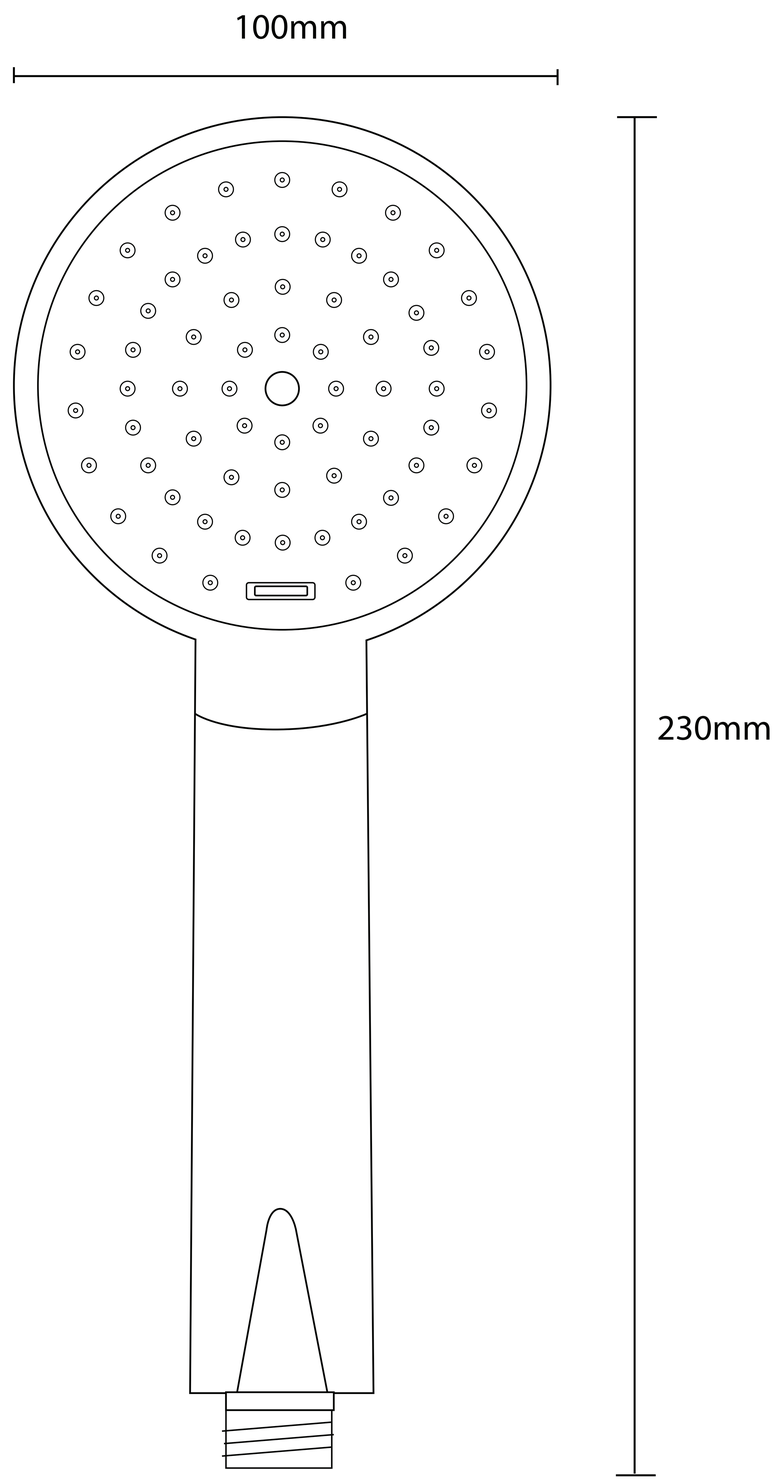
100mm
230mm