INSTINCT®

Issue No. v1 09 2024

Keros_INS37055_TDS_V1

Technical Data Sheet | Shower

www.instinctproducts.co.uk

Keros Round Two Handle Twin Outlet Concealed Valve + Brass Plate
INS37055

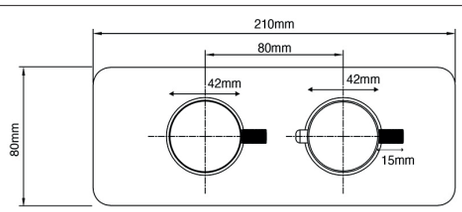

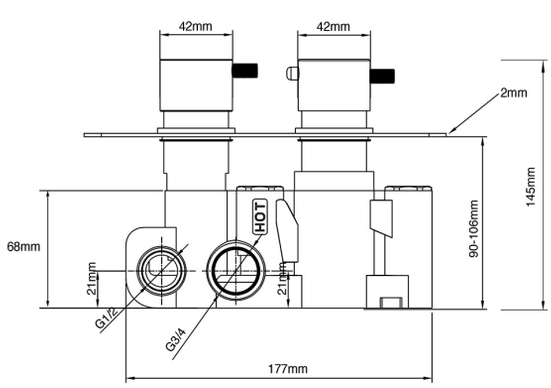

Specification

Finish	Chrome
Dimensions	210(h) x 80(w) mm
Weight	2.83 kg
Body Material	Brass
Valve Connection	½″
Valve Handle Material	Brass
Min Operating Pressure	0.5 Bar
Max Operating Pressure	3 Bar
Max Static Pressure	5 Bar
Max Operating Temp	45°C

Flow Rates

Pressure	0.2	0.5	1	3
L/min	5.7	9.7	13.8	25.4

All Pressures in Bar. All flow in L/Min. Dimensions supplied are nominal and subject to tolerance. Inclusion or restrictors (sold separately unless stated) will affect flow rate result. Performance details are based on trials under test conditions and for guidance only. The Company reserves the right to change product specification without prior notice.

Key Features + Benefits

- 10 — Year Guarantee
- 5 — Year Guarantee Working Parts
- MP — Medium Pressure
- Min 0.5 Bar — Min. Operating Pressure
- Anti Scald

Certifications + Approvals

WRAS APPROVED PRODUCT

Imex Ceramics
15 Millbrook Industrial Estate, Sybron Way, Crowborough TN6 3DU. Technical Support – Tel: 01530 835598 Email: sales@imex.team

All information on the data sheet is correct at the time of publication. All measurements are approximate and subject to standard tolerances.